Transistor-Based Bistable Latch Circuit (ON/OFF Memory Switch) npn pnp

This project is a bistable latch circuit built using two NPN transistors, designed to act as a simple electronic memory switch. The circuit allows a load (LED in this case) to remain ON or OFF even after the push button is released.

Powered by a 9V supply, this circuit demonstrates:

- Transistor switching
- Positive feedback
- Bistable memory operation
- Electronic push-button ON/OFF control without a relay

This type of circuit can be used in:

- Soft power switches
- Toggle control systems
- Basic memory elements
- Embedded electronics projects

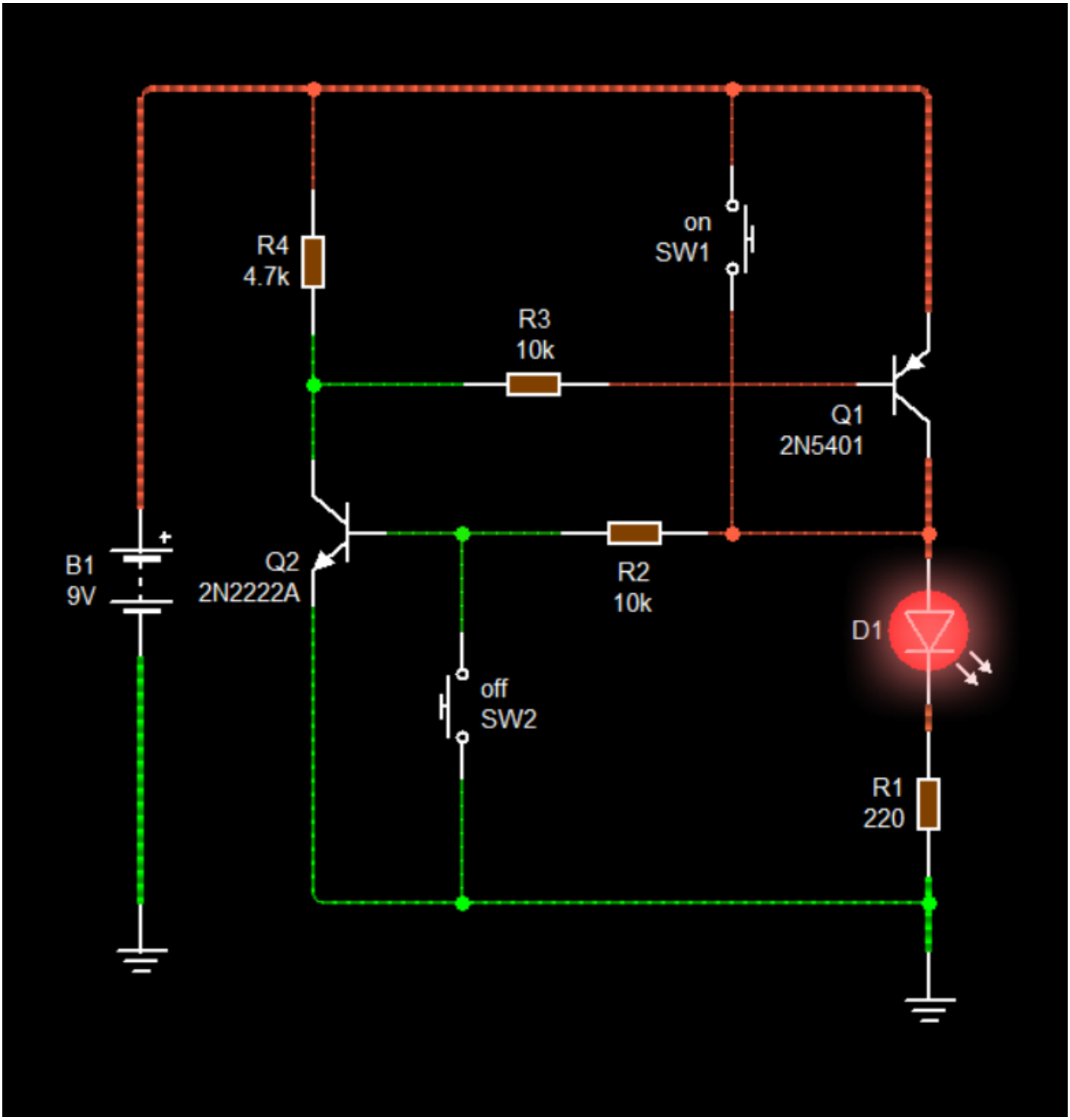
R4
4.7k
on
SW1
R3
10k
Q1
2N5401
B1
9V
Q2
2N2222A
R2
10k
D1
off
SW2
R1
220

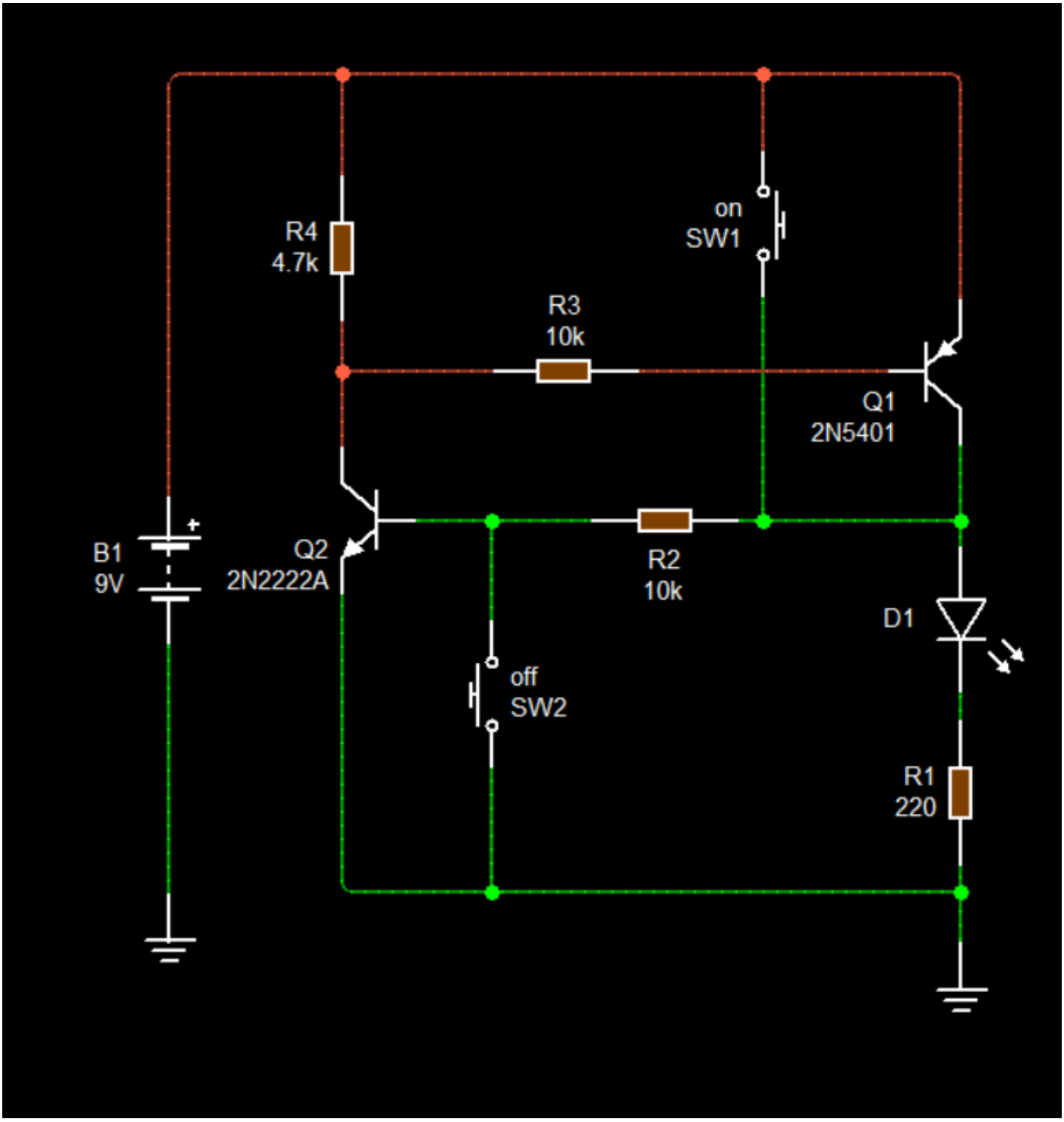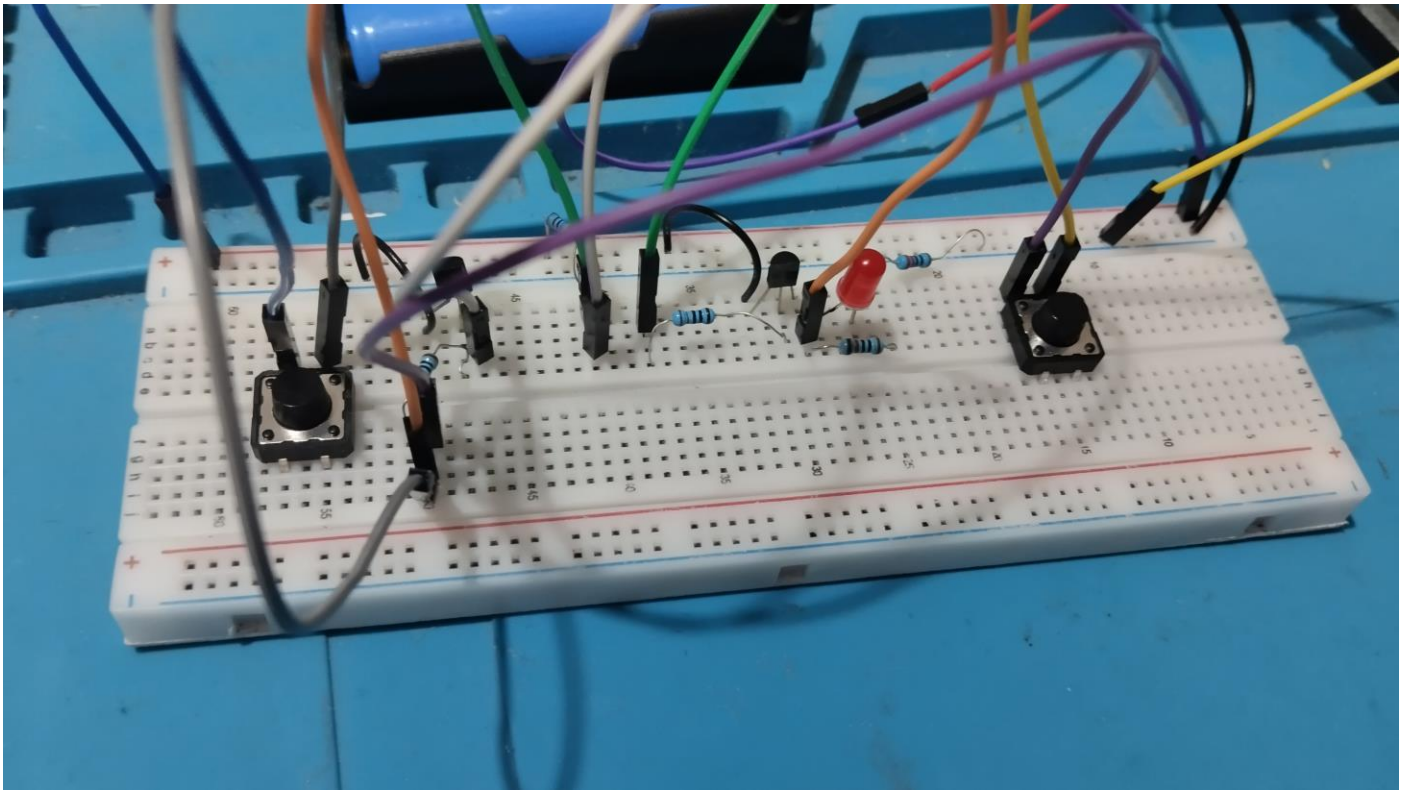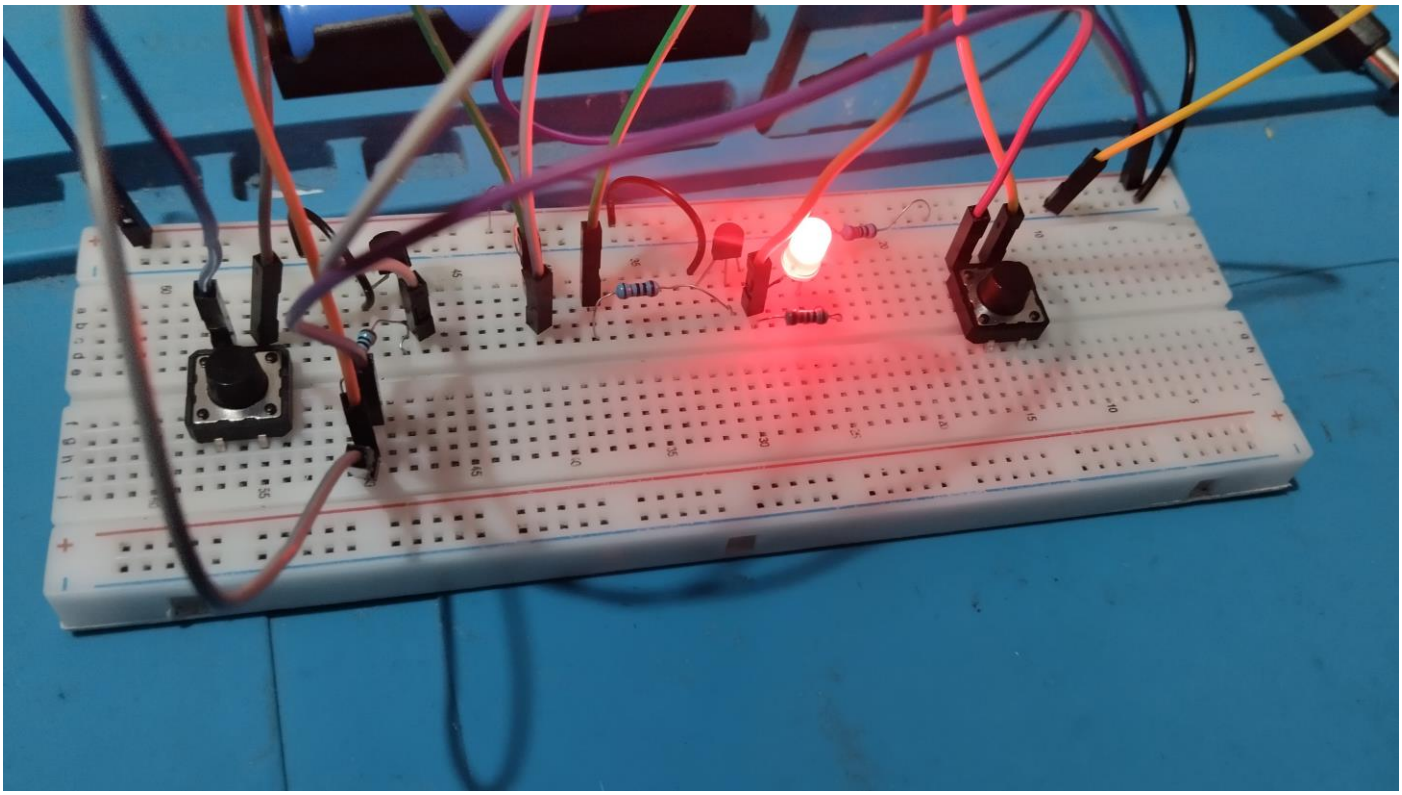
R4
4.7k
on
SW1
R3
10k
Q1
2N5401
B1
9V
Q2
2N2222A
R2
10k
D1
off
SW2
R1
220